ENGINE, COOLING, AUX. SYSTEM - Z26NEY99A4/B4/A6/B6 (C0703970)

2026 RZR - RZR XP S 1000 ULTIMATE (R01) - Z26NEY99A4/B4/A6/B6

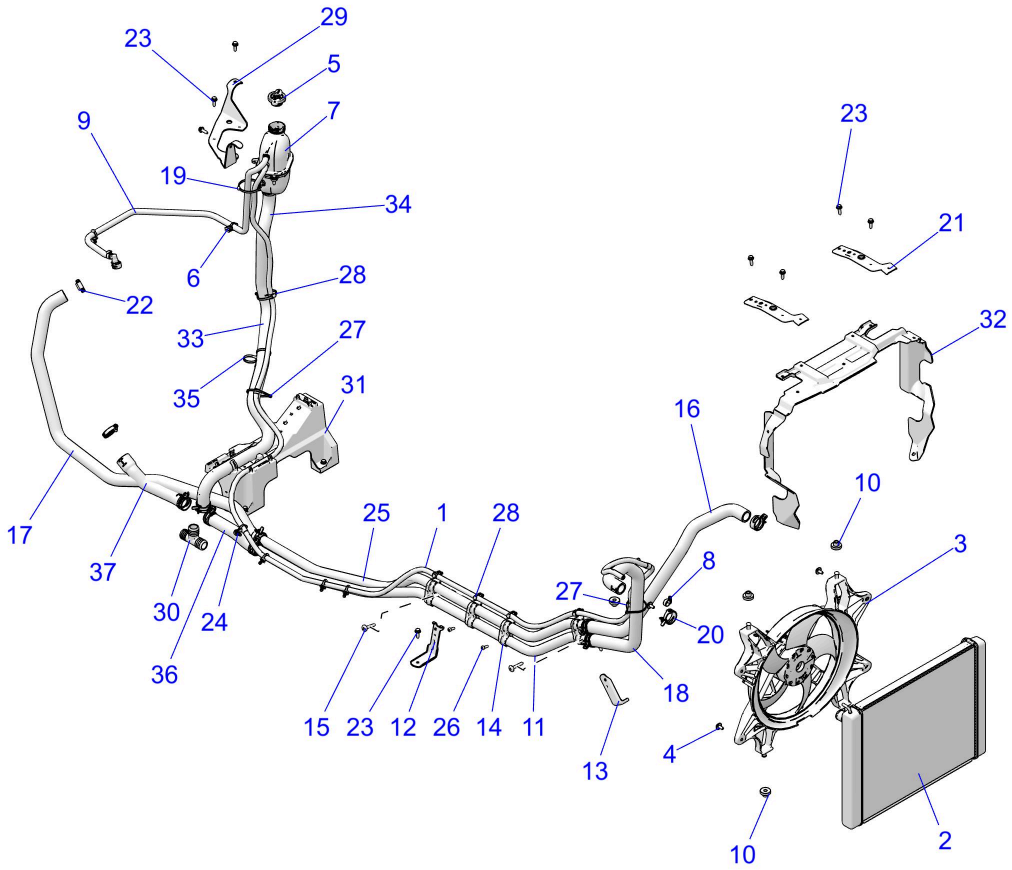

© 2023 Polaris Industries Inc. C0703970

Reference #	*Part#*	*Description*	*Quantity*
1	2522460	ASM-HOSE,VENT,RAD TO BTL	1
2	1244681	ASM-RADIATOR,CORE	1
3	2416113	FAN-RADIATOR,ASM	1
4	7519585	BOLT, M6X15MM	4
5	1241379	CAP-PRESSURE	1
6	7081890	CLIP-EDGE,HARNESS	1
7	1244655	ASM-TANK,SURGE	1
8	7080476	CLAMP, HOSE, S.S.(10)	1
9	1244637	ASM-VENT,COOLANT,HEAD TO BTL	1
10	7052028	GROMMET-FLANGED,.36X.56X1.06	4

11	5141612	TUBE-COOLANT,1"	1
12	5259433-329	BRACKET, COOLANT TUBE, BLACK	1
13	5260766-329	BRACKET, COOLANT TUBE, BLACK	1
14	5451221	BRACKET-COOLANT TUBE	4
15	7519001	SCR-TXTH-M6X1.0X50, 8.8, ZPB	2
16	5418906	HOSE-UPPER,RADIATOR	1
17	5414530	HOSE, ENGINE OUTLET, REAR	1
18	5418907	HOSE-LWR,RAD,LONG	1
19	7081808	CLIP-EDGE,1-3MM,6-45MM,SERT.	1
20	7082308	SPRINGBAND-CLAMP,BLK	10
21	5275255-329	BRKT-RAD UPR MNT,E-COAT	2
22	7081192	CLAMP-HOSE(WORM DR)25-40MM	2
23	7518529	SCR-M6X1.0X20,HXHD,FLG,TDFM,BK	13
24	7082406	CLIP-FIR TREE,12.5MM OFF,90DEG	1
25	5141611	TUBE-COOLANT,1"	1
26	7512026	SCREW-#10X3/4-HI/LO-PN-T25,TRX-M	2
27	7080138	CABLE-TIE,DIA12-50MM,WTHR-RES.	2
28	7081496	CLIP FIR-TREE,DIA6-33MM	9
29	5268906-329	BRKT-COOLANT BTL,VNT HEAD,BLK	1
30	7052373	CONNECTOR-TEE,1",1",1" BARBED	1
31	5459724-070	ROUTING TRAY,REAR,BLK	1
32	5466065-070	SHROUD-RADIATOR,BLK	1
33	5417261	HOSE-COOLANT BOTTLE,RETURN	1
34	7081432	CLAMP-HOSE, 17/32, GREEN	2
35	7081916	CABLE-TIE,DIA6-38MM,DUAL-LOOP	1
36	5417248	HOSE-ENG INLET,FRT	1
37	5417249	HOSE-ENG INLET,REAR	1

Copyright 1996-2026 Polaris Industries U.S.A All rights reserved.